LOCUS MAP

NOT TO SCALE

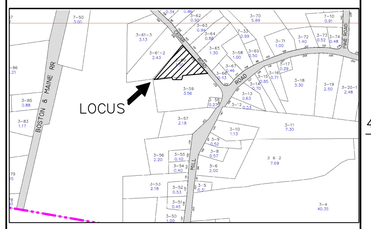

REMOVE EXISTING TANK, ALL COMPONENTS OF EXISTING SYSTEM, AND ASSOCIATED ORGANIC MATERIAL BEFORE STARTING INSTALLATION

NOTE: INSTALLATION SPECIFICATIONS OUTLINED IN SUBDIVISION AND INDIVIDUAL SEWAGE DISPOSAL SYSTEM DESIGN RULES (Env-Wq 1000) ARE INCLUDED AS PART OF THIS DESIGN BY REFERENCE. ANYONE WHO INSTALLS THIS SYSTEM MUST KNOW AND ADHERE TO THESE RULES.

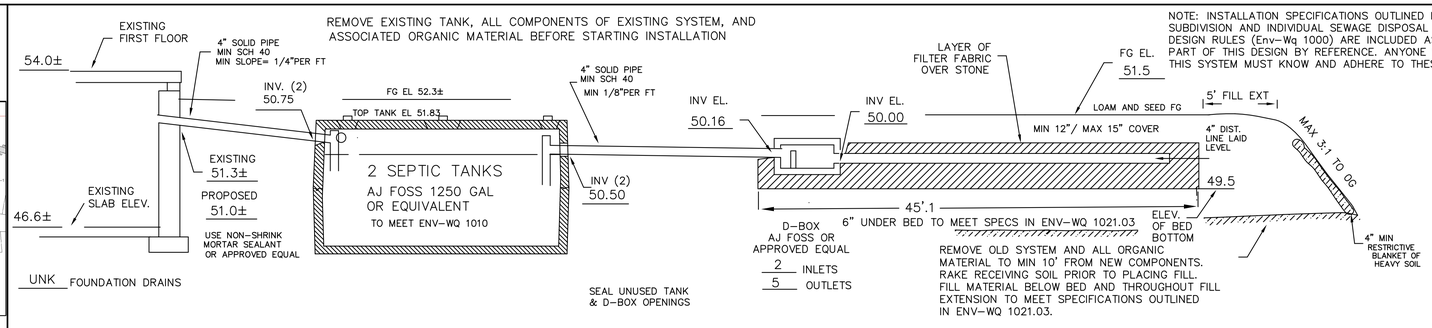

CROSS SECTION DISPOSAL SYSTEM – NOT TO SCALE

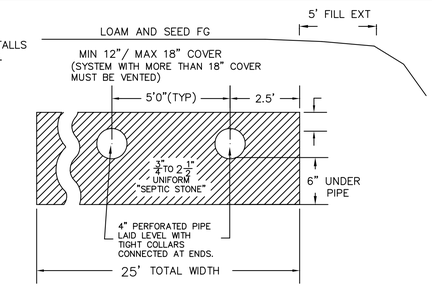

STONE TO MEET SPECIFICATIONS OUTLINED IN ENV-WQ 1016.04

PLAN : 1"=20'

PROPOSED ISDS IS DESIGNED TO SERVICE 1 STRUCTURE WITH 2 DWELLING UNITS, EACH UNIT TO CONTAIN A DISHWASHER, WASHING MACHINE, TOILETS, AND TUB/SHOWERS. THERE IS NO KNOWN BURIAL SITE OR CEMETERY ON THE LOT OR THE ABUTTING LOT WITHIN 100' OF ANY COMPONENT OF THE ISDS.

SITE LOADING

LOT AREA: 1.5 ACRE, SOIL CLASS 510, GROUP 1, WITH TOWN WATER 2000 GPD/ ACRE X 1.5 = 3000 GPD ALLOWED SITE LOADING

6 BEDROOM DUPLEX @ 150 GPD/BEDROOM = 900 GPD SITE LOADING PROPOSED.

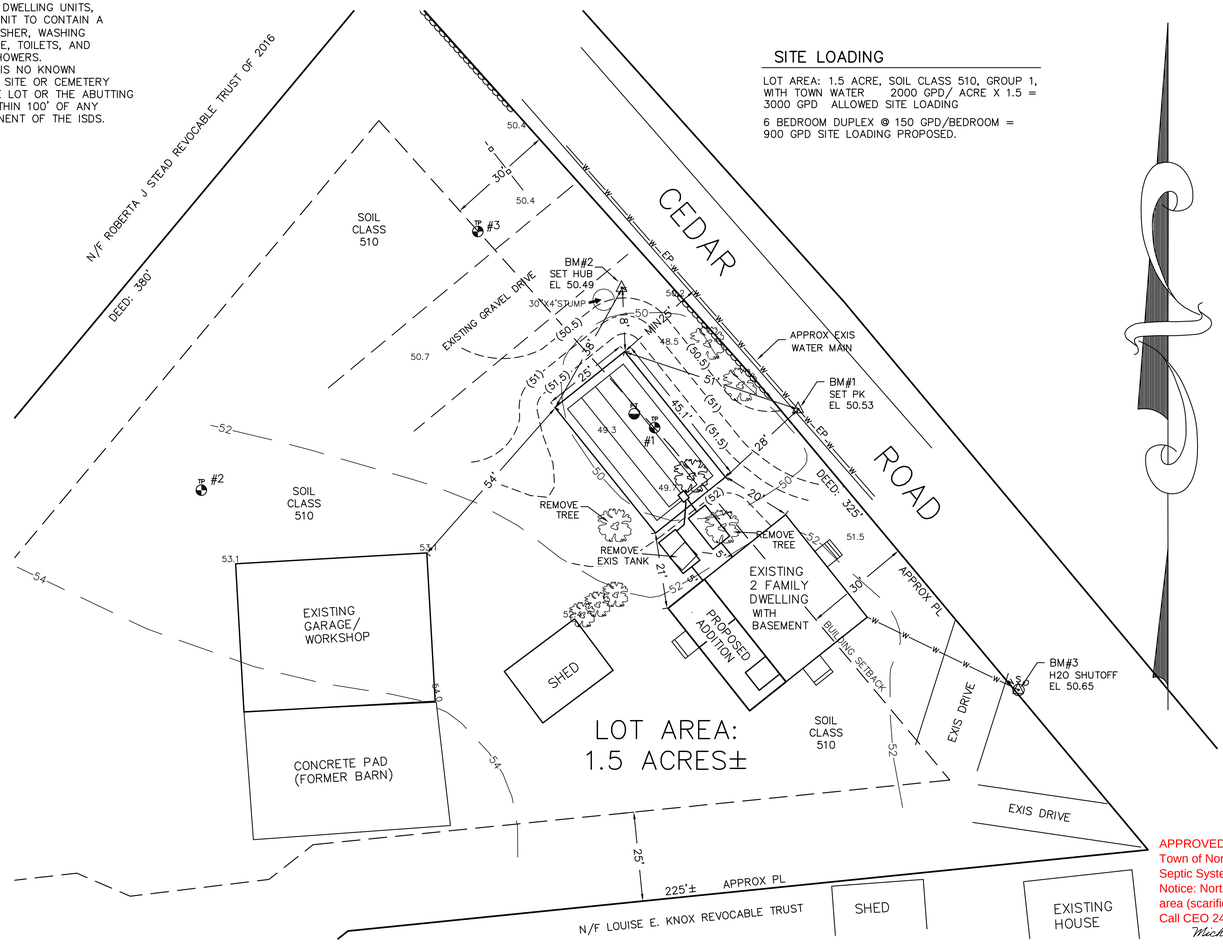

APPROVED 16 July 2019
Town of North Hampton
Septic System Examiner
Notice: North Hampton requires a basal area (scarification) inspection.
Call CEO 24 hours in advance at 964-8650.
Michael Cuomo, for RCCD

TEST PIT DATA

DATE: MAY 8, 2019

TOWN INSPECTOR: MIKE CUOMO

TEST PIT #1 EL 49.3

0 –12"	10YR2/2	FINE SANDY LOAM, FRIABLE GRANULAR
12–36"	10YR5/6	GRAVELLY FINE SANDY LOAM, FRIABLE BLOCKY
36–56"	2.5Y6/4	GRAVELLY SAND, LOOSE, SINGLE GRAIN
56–70"	2.5Y5/3	STONY SAND, LOOSE, MASSIVE W/REDOX

ESHWT AT 56", NO OBSERVED WATER, NO REFUSAL

TEST PIT #2 EL 52.4

0 –24"	10YR2/2	FINE SANDY LOAM, FRIABLE GRANULAR
24–36"	10YR5/6	GRAVELLY FINE SANDY LOAM, FRIABLE BLOCKY
36–52"	2.5Y6/4	GRAVELLY SAND, LOOSE, SINGLE GRAIN
52–64"	2.5Y5/3	GRAVELLY SAND, LOOSE, MASSIVE W/REDOX

ESHWT AT 52", NO OBSERVED WATER, NO REFUSAL

TEST PIT #3 EL 50.1

0 –20"		STONY FINE SANDY LOAM FILL & DEBRIS, TO BE REMOVED
20 –24"	10YR3/2	FINE SANDY LOAM, FRIABLE GRANULAR
24–32"	10YR5/6	LOAMY SAND, FRIABLE GRANULAR
32–48"	2.5Y6/46	GRAVELLY SAND, LOOSE, SINGLE GRAIN
48–62"	2.5Y6/4	SAND, SINGLE GRAIN, LOOSE W/REDOX

ESHWT AT 48", NO OBSERVED WATER, NO REFUSAL

PERC TEST DATA

DESIGN PERC RATE: 2 MIN/IN

DESIGN LOADING: 2 UNITS @ 3 BEDROOMS = 6 BEDROOMS

AREA REQUIRED: 1126 SF REQUIRED

AREA PROPOSED: 25' X 45.1' = 1127 SF PROVIDED

SOIL CLASS: 510 HOOSIC

(SOURCE: USDA–SCS SOIL SURVEY)

BENCH MARKS: DATUM = ASSUMED

#1 SET PK EL 50.53

#2 SET HUB EL 50.49

#3 WATER SHUTOFF EL 50.65

DESIGN INTENT:

1. THE BOTTOM OF THE EFFLUENT DISPOSAL SYSTEM SHALL BE CONSTRUCTED AT ELEVATION 49.5
2. THERE IS/ARE APPROX 0.5 FT BELOW ORIGINAL GROUND ON THE HIGH CONTOUR THE DESIGNED EDS. (EL 50)

SUITABLE REPLACEMENT AREA:

SYSTEM MUST BE REBUILT IN PLACE OR REDESIGNED.

LEGEND:

50	EXISTING CONTOUR
(50)	PROPOSED CONTOUR
50.0	EXISTING SPOT ELEVATION
(50.0)	PROPOSED SPOT ELEVATION

NOTES:

1. THIS PLAN IS NOT TO BE CONSTRUED AS A BOUNDARY SURVEY. PROPERTY LINES SHOWN ARE APPROXIMATED BASED ON INFORMATION FROM THE FOLLOWING SOURCE: RCRD PLANS 01141, D25061, RCRD 5991–2413
2. WS&PCD SUBDIVISION APPROVAL N/A LOT OF RECORD RCRD 1029–362 (1945)
3. THIS SYSTEM IS NOT DESIGNED TO HANDLE GARBAGE DISPOSAL, JACUZZI BATH, OR SEWAGE EJECTOR PUMP WASTE. BACKWASH FROM WATER SOFTENER SYSTEMS SHOULD BE DISCHARGED TO A SEPARATE DRYWELL.
4. a) NO SURFACE WATER WITHIN 75' b) NO WELLS WITHIN 75' c) NO HYDRIC B SOILS WITHIN 75' d) NO HYDRIC A SOILS WITHIN 75' OF PROPOSED SYSTEM
5. DESIGNER MUST BE CONSULTED FOR ANY PROPOSED CHANGES OR ERRORS/DISCREPANCIES FOUND DURING SYSTEM INSTALLATION. (603 929–7404) INSTALLER IS RESPONSIBLE FOR ANY TOWN PERMITS OR INSPECTIONS REQUIRED FOR THIS INSTALLATION.
6. SUBJECT PROPERTY IS NOT LOCATED WITHIN A FEDERALLY DESIGNATED FLOOD HAZARD ZONE.

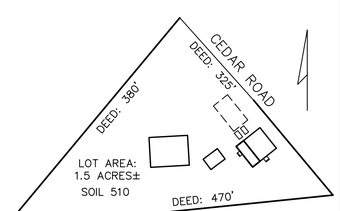

1"=100'±

PROPOSED REPLACEMENT

SEPTIC SYSTEM PLAN

EXISTING 2 FAMILY DWELLING

LOCUS: 6 CEDAR ROAD
NORTH HAMPTON. NH
TAX MAP 3 LOT 60

OWNER: W. ALEXANDER HOMES, LLC
250 WOODLAND ROAD
HAMPTON, NH 03842

NEW HAMPSHIRE Designer of Subsurface Disposal Systems ★★★ Anne W. Bialobrzeski No. 348 Department of Environmental Services

APPLICANT:
STOCKTON SERVICES
PO BOX 1306
HAMPTON, NH 03843–1306
603 929–7404

DATE: JULY 9, 2019

APPROVAL:

836

SYSTEM OWNER IS RESPONSIBLE FOR THE FOLLOWING OPERATING REQUIREMENTS

ENV–WS 1023.01 (a) SEPTIC TANKS SHALL BE INSPECTED FOR ACCUMULATION OF SLUDGE AND SURFACE SCUM AT LEAST ONCE EVERY YEAR. (b) WHEN THE COMBINED THICKNESS OF SLUDGE AND SURFACE SCUM EQUAL 1/3 OR MORE OF THE TANK DEPTH, THE TANK SHALL BE PUMPED BY A LICENSED SEPTIC TANK PUMPER.

ENV–WS 1023.02 TO PREVENT OBSTRUCTION OF THE DISTRIBUTION LINES AND LEACH FIELD, GREASE AND BULKY WASTE SHALL NOT BE FLUSHED OR OTHERWISE INTRODUCED INTO THE SEPTIC SYSTEM.

ENV–WS 1023.03 TOXIC AND HAZARDOUS MATERIALS SHALL NOT BE FLUSHED OR OTHERWISE INTRODUCED INTO THE SEPTIC SYSTEM.

ENV–WS 1023.04 TO PREVENT DAMAGE TO THE DISTRIBUTION LINES AND LEACH FIELD, VEHICLES, LIVESTOCK, AND OTHER HEAVY OBJECTS SHALL NOT BE ALLOWED ON THE LEACH FIELD.

ENV–WS 1023.05 IF WET AREAS APPEAR ON THE GROUND SURFACE ABOVE THE DISTRIBUTION LINES OR LEACH FIELD OR IF DISAGREEABLE ODORS OCCUR, THE SYSTEM SHALL BE INSPECTED FOR THE SOURCE OF THESE PROBLEMS, AND CORRECTIVE ACTION SHALL BE TAKEN.

REVIEWED AND APPROVED
IN ACCORDANCE WITH THE REQUIREMENTS OF THE NH DEPT OF ENVIRONMENTAL SERVICES
WATER DIVISION
Eric Thomas
Date: 7/31/2019
#eCA2019073113